SECTION 8B – BMP OPERATION

The bone marrow processing (BMP) procedure is intended for use when a WBC disposable is used to remove mononuclear cells (MNC) from human bone marrow. Although the Spectra system requires operator attention during these procedures, the Spectra Version 5.1 software and the Spectra WBC Colorgram™ reduce the amount of attention required.

"Stem cells" for transfusion is not a biological product licensed by the U.S. Food and Drug Administration. COBE BCT makes no claims for the efficacy of this product. Stem cell collections should be done in accordance with Investigational Device Exemptions.

REQUIRED EQUIPMENT AND SUPPLIES

- COBE Spectra™ Apheresis System
- Single-stage channel filler
- Collect flow path overlay
- WBC disposable set
- Spectra WBC Colorgram™ (Reorder Number 700744-000)
- 0.9% sodium chloride for injection (1000 ml). When only single-port saline containers are available and/or hypersensitivity reactions associated with ethylene oxide sterilization must be avoided, see **HOW TO USE AN ALTERNATIVE SINGLE-PASS PRIME PROCEDURE** in SECTION 10 – HELPFUL HINTS.
- Forceps or hemostats
- Bone Marrow Processing Set
- One 600 ml transfer bag with male luer for plasma collection

Copyrighted example — Not for distribution

NOTE

Version 5.1 software allows the operator to enter the separation factor for WBC procedure in the Automatic Mode.

1. To change the separation factor, press the SPIN/ RPM key. The following screen appears:

SEPARATION FACTOR = {nnnn} (250-2000)
SPIN/RPM = nnnn

2. Use the number keypad to enter a new separation factor value.

The allowable range for the separation factor is 250-2000. COBE BCT recommends a separation factor of 500 for BMP procedures.

CAUTION

The operator MUST attach a plasma collection bag to the plasma line of the WBC disposable set. PLASMA IS AUTOMATICALLY COLLECTED DURING A BMP PROCEDURE for marrow with an RBC volume greater than 215 ml.

NOTE

Prior to processing on the COBE Spectra Apheresis System, ACD-A should be added to the bone marrow at an ACD-A/bone marrow volume ratio of 1:10 as follows:

a. Add the weights of the bags of marrow and calculate the volume:

   Volume (ml) = (marrow weight – bag tare weight(s)/ 1.058)

b. Calculate the volume of ACD-A to be added:

   Volume (ml)/10 = ACD-A Volume

CAUTION

The bone marrow should be filtered using a 170 micron filter to remove bone chips, debris, and clots prior to processing.

Copyrighted example — Not for distribution

BMP PROCEDURE

Follow these steps to conduct a BMP procedure after the Spectra™ Apheresis System has been set up and disposables loaded and primed. Refer to SECTION 3 – LOADING, PRIMING, AND REMOVING DISPOSABLES for instructions on setting up the equipment and loading and priming disposables. BMP procedures use a WBC set.

Operator Action	System Action
Enter Data	BMP procedures start with the following values:

Run Parameter	Value
BMP Volume Processed for marrows of greater than 215 ml RBC volume	3X marrow volume, counted from time the collect valve opens
BMP Volume Processed for marrows between 170 and 215 ml RBC volume	4X marrow volume, counted from time the collect valve opens
BMP Volume Processed for marrows of between 100 and 170 ml RBC volume	5X marrow volume, counted from time the collect valve opens
BMP Ratio	99.9:1
BMP Collect Rate	1.5 mL/min
BMP Inlet Flow (marrow volume ≥ 1 liter)	90 mL/min
BMP Inlet Flow (marrow volume < 1 liter)	70 mL/min

CAUTION

Clinical data have indicated that marrows of less than 125 ml RBC volume will have a reduced efficiency.

The Spectra control program then uses the hematocrit to calculate the plasma pump flow rate.

Copyrighted example — Not for distribution

Operator Action	System Action
1. Enter the volume of the bone marrow in milliliters. Enter the hematocrit of the bone marrow after anticoagulant has been added as a whole number.	Total bag volume = {nnnnn} mL Bone Marrow hematocrit ={nn} % Total bag volume (Allowed Range: 100 to 6,000 ml; Validated Range: > 300) Bone Marrow Hematocrit (Allowed Range: 10% to 80%; Validated Range: 15% to 45%) **NOTE** 100 mL RBC is the minimum allowable volume. The COBE Spectra control panel will check the total bag volume times hematocrit to prevent entry of a combination resulting in fewer RBCs. Inlet volume=____ml, inlet flow=___.__, time=___min. collect=____. OK (YES/NO)? The Spectra system uses data entered by the operator and microprocessor algorithms to calculate and show inlet volume and time information on the bone marrow processing results display. • Inlet pump flow rate displayed in milliliters per minute. • Run time displayed in minutes. • Collect volume displayed in milliliters **NOTE** The initial data screen values indicate adequate inlet volume and time to establish the interface and open the collect valve. The inlet target and time are updated when the collect valve is opened. The initial values should not be changed because they will be updated.

Copyrighted example — Not for distribution

Operator Action **System Action**

2. Approve bone marrow processing values:

   - Press YES=exit data entry displays and continue to **Transfer Bone Marrow** section.
   - Press NO=next display: *change bone marrow processing settings menu*.

Change: 1=run time, 2=inlet flow, 3=collect volume, 4=inlet volume.

IMPORTANT: When one value is changed, this will affect other values. For instance, see the following table.

Changed Value	Affected Value
Run Time	Inlet Volume
Inlet Flow	Collect Volume Time
Collect Volume	Collect Pump Flow Rate
Inlet Volume	Run Time Collect Volume

3. Select bone marrow processing value to be changed:

   - Press 1=brackets around run time
   - Press 2=brackets around inlet flow
   - Press 3=brackets around collect volume
   - Press 4=brackets around inlet volume

Inlet volume=____ml, inlet flow=___.__, time=___min. collect=____.

4. Change the selected value either with a direct entry or by using the arrow keys. The up arrow key increases the value, and the down arrow key decreases it. Affected value(s) will also be changed. When satisfied that changed and affected values are appropriate, press the ENTER key to return to the *bone marrow processing results message* (precedes Step 7 above).

Copyrighted example — Not for distribution

Operator Action **System Action**

NOTE

Due to the complexity of Spectra's algorithms, the displayed values of the affected parameters may not be updated immediately after the change is made. Wait for 3 to 5 seconds and verify the final values before pressing ENTER to accept the change.

When changing bone marrow processing values, the following value ranges are allowed for changed values:

Changed Value	Allowed Range
Run Time	10-999 min
Inlet Flow	20-150 ml/min
Collect Volume	10-9999 ml
Inlet Volume	100-32,000 ml

This screen appears for bone marrows with a red blood cell volume greater than 215 ml. Plasma is automatically collected for these procedures.

Connect plasma bag.
Press ENTER

5. Connect a plasma bag to the plasma line. Press the ENTER key.

Transfer Bone Marrow

WARNING

The BMP procedure automatically collects plasma whenever the RBC volume is greater than 215 ml during the first volume of bone marrow processed. You MUST connect a plasma bag at the plasma line luer connection of the WBC set.

1. Transfer the marrow into the Bone Marrow Processing (BMP) set:

Connect Bone Marrow.
Close saline lines. CONTINUE

Copyrighted example — Not for distribution

Operator Action	System Action

a. Place a clamp at point 0 as marked on the BMP set. (See Figure 8B-1.)

b. Clamp all white pinch clamps of the administration lines of the BMP set. These include four spike lines and two luer connection lines.

c. If marrow has been prefiltered, use the spikes on the administration lines to enter the marrow bag directly.

d. If filtering is required:

1) Connect a 170 micron filter administration set to the bone marrow bag.
2) Connect the filter administration set to the luer connector(s).

NOTE

The air chamber below the spikes is not intended to filter the bone marrow. It allows the bone marrow product to flow into bag A. If the chamber clogs, additional filtering may be required.

e. Open the clamp to the line (either spike or luer line) attached to the BMP Set. The bone marrow is transferred to bag A.

2. Connect the BMP Set to the WBC Set:

a. Connect the red line to the WBC Set access line.

b. Connect the blue line to the WBC Set return line.

3. Once the marrow has been transferred, seal off the administration line of the BMP Set. This line may be removed at this time.

4. Hang the bags and remove the hemostat from clamp point 0. Allow the bone marrow bag access and return lines to prime. Then clamp at point 1. (See Figure 8B-1.)

5. Close both the access and return saline lines.

6. Open the white clamps on the access and return lines.

Copyrighted example — Not for distribution

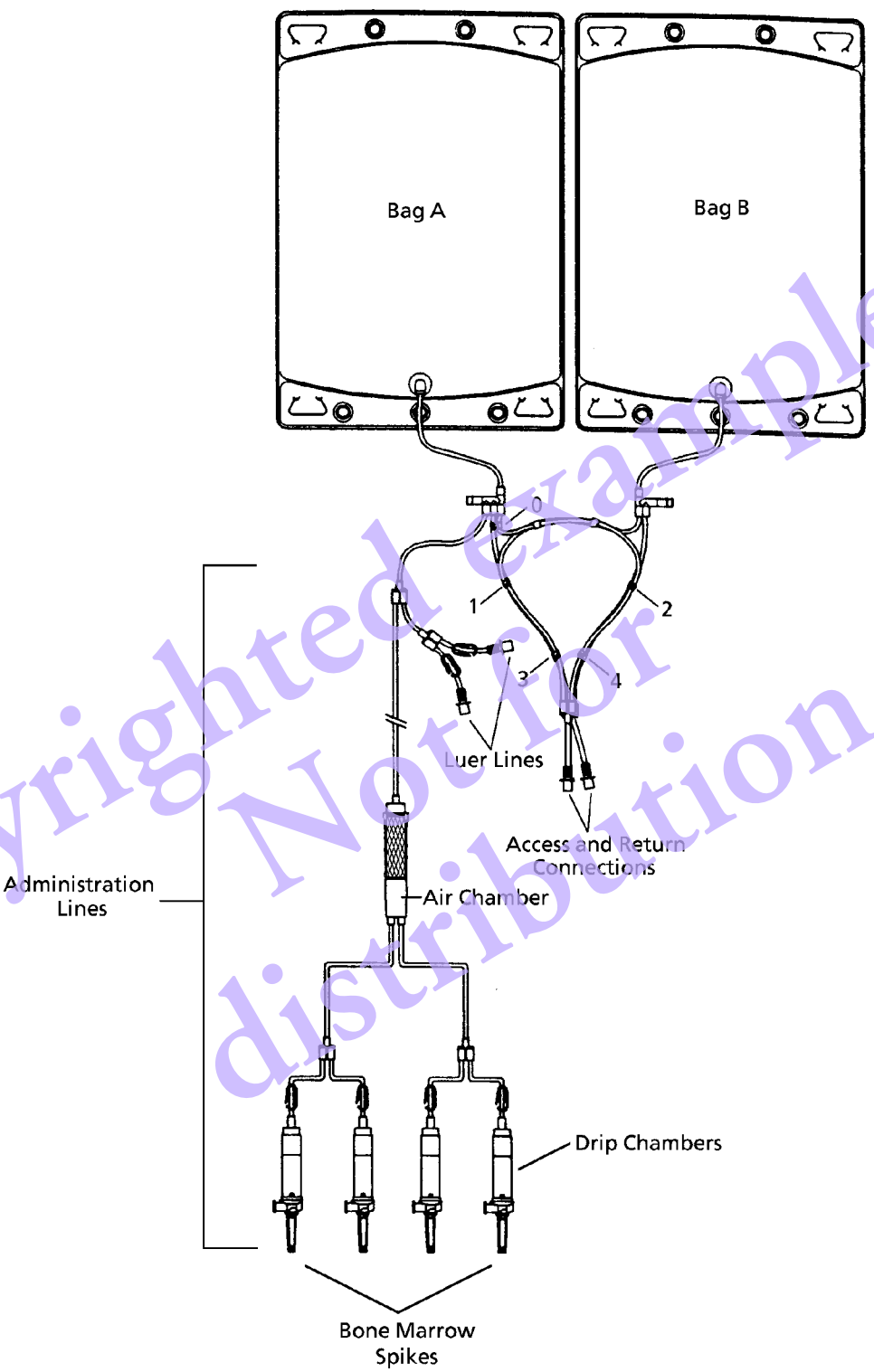

Figure 8B-1. BMP Set

Copyrighted example – Not for distribution

Operator Action	System Action

Start Run Mode

1. Press the CONTINUE key to start the system in Run. Review the Run screen at the right.

All pumps will start, and centrifuge speed will increase based on parameters preset by the data and Spectra algorithms.

AC	Inlet	Plasma	Collect Replace	Inlet/AC Ratio	Spin RPM
__.__	___.__	___.__	___.__	___.__	____

Diverting prime saline.

NOTE

AC infusion rate is not applicable to BMP. The AC pump is at 0 ml/min (though not restricted to 0 ml/min) throughout the procedure as the marrow has been previously anticoagulated.

Testing valve positions . . .

BMP

Several valves change positions and several pumps change flow rates as the system performs a final valve position check once the Run mode is entered. The return valve remains closed during this test.

__.__	___.__	___.__	___.__	___.__	____

Quick Start in progress.

At the beginning of BMP procedures, “Quick Start” causes automatic changes in the plasma pump as a fast, automatic method to establish the correct RBC/plasma interface.

The plasma pump will change automatically to remove plasma from the channel and establish an optimal hematocrit.

NOTE

Normally, **do not** make any changes in the plasma pump flow rate during “Quick Start” and do not enter Manual mode. If you do, “Quick Start” will end. If you do press the plasma pump flow rate key and press the ENTER key or enter Manual mode during “Quick Start,” you will need to establish the interface following the procedures in **HOW TO ESTABLISH THE WBC INTERFACE POSITION** in SECTION 10 – HELPFUL HINTS.

Copyrighted example – Not for distribution

Operator Action	System Action
NOTE "Quick Start" requires an accurate (within 2 to 3 percentage points) marrow starting hematocrit value to perform properly. If you were not able to obtain an accurate hematocrit value, you probably **do** want to interrupt "Quick Start" by changing the plasma pump flow rate. Refer to **HOW TO ESTABLISH THE WBC INTERFACE POSITION** in SECTION 10 – HELPFUL HINTS for instructions.	
	The following message displays when "Quick Start" is complete:
	Quick Start completed. Monitor collect line. Press CLEAR.
	"Quick Start" ends within 10 to 15 minutes after the start of the procedure.
When "Quick Start" is complete, monitor the collect line for proper interface positioning.	
The COBE Spectra WBC Colorgram™ helps you determine when the RBC/plasma interface position is correct for the type of procedure being performed.	
To use the Colorgram, insert it beneath the clear, *small-diameter* collect line where it exits the centrifuge, just prior to the four-lumen connector. (See Figure 8B-2.)	

Copyrighted example — Not for distribution

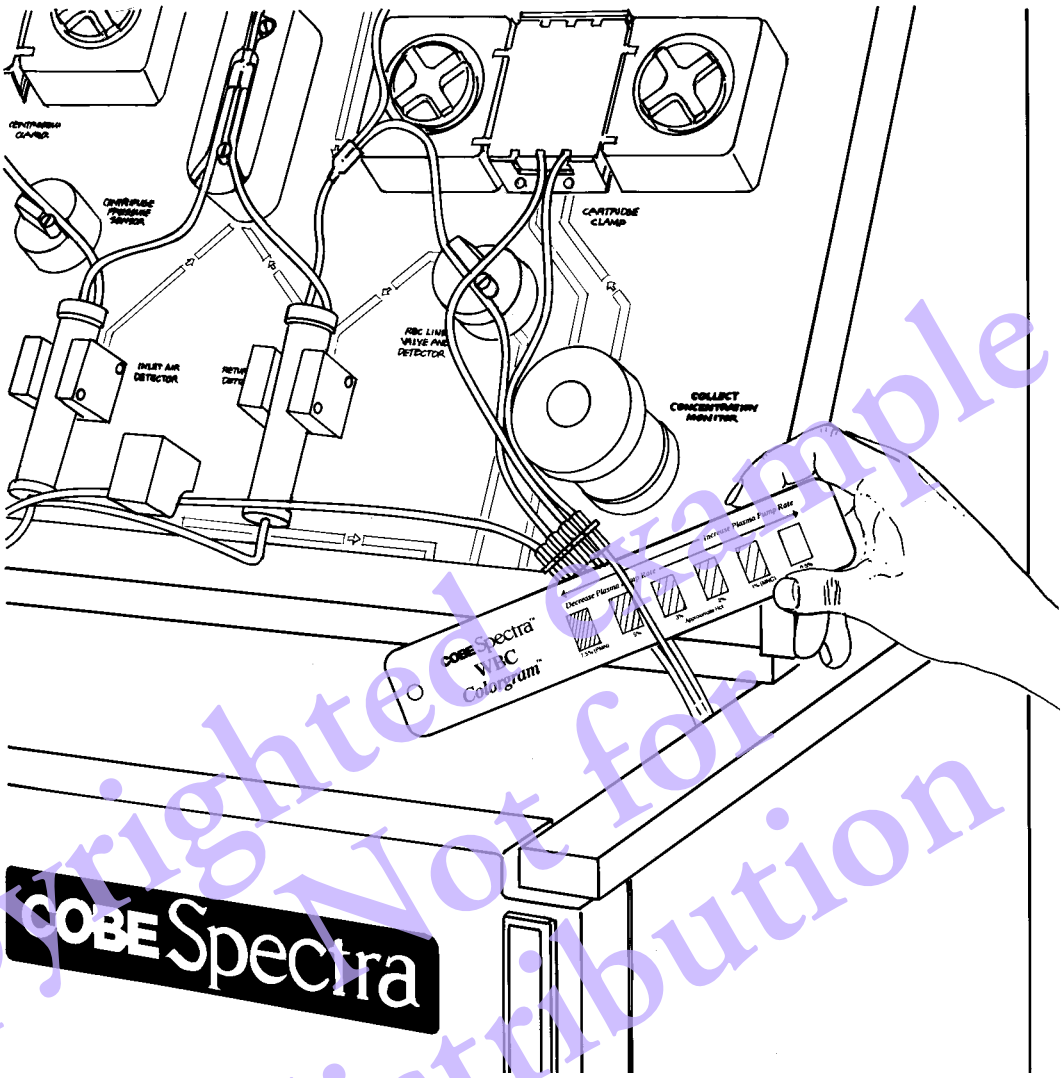

Figure 8B-2. Correct Position of COBE Spectra WBC Colorgram™

Copyrighted example – Not for distribution

Operator Action	System Action
Then compare the colored rectangles on the Colorgram with the color of the fluid in the collect line	

NOTE

The most accurate color comparison is made by observing the Colorgram under cool, white fluorescent light.

Operator Action	System Action

If the Colorgram indicates that the fluid in the collect line is too dark for the type of cells being collected, you should decrease the plasma pump flow rate by small adjustments.

For BMP procedures, these adjustments should be about 0.5 to 1.0 ml/min, with 1 to 3 minutes between each adjustment.

On the other hand, if the Colorgram indicates that the fluid in the collect line is too light, you should increase the plasma pump flow rate by the same small increments with the same amount of time between each adjustment.

Once the Colorgram indicates that the correct RBC/plasma interface is established, the control port inside the centrifuge channel will maintain a stable interface. However, you should continue to use the Colorgram to monitor the collect line occasionally.

For BMP procedures, during processing mix the bone marrow by gently shaking the bone marrow bag from side to side to help prevent settling of the cellular components.

HINTS FOR ESTABLISHING THE BONE MARROW BLOOD PLASMA INTERFACE

- Plasma is automatically removed while processing the marrow in bag A for marrows with RBC volume greater than 215 ml to stabilize the hematocrit in the channel throughout the remainder of the procedure.
- For marrows with RBC volumes less than 215 ml, adjustments are made to the plasma pump to stabilize the channel hematocrit.
- White blood cell removals should ideally have a minimum of red cells and a maximum of white cells. Typically, there is a significant number of white cells and platelets mixed in with the innermost layer (top) of the red cells. Therefore, it is necessary to collect some red cells to get a maximum white cell yield. The WBC collect tube in the centrifuge will contain streaks of red cells.

2. Open the collect valve.
   a. Press the VALVE key.
   b. Press the 4 key to select the collect valve.

Copyrighted example — Not for distribution

Operator Action

System Action

c. Press the 1 key to select collect.

d. Press the ENTER key.

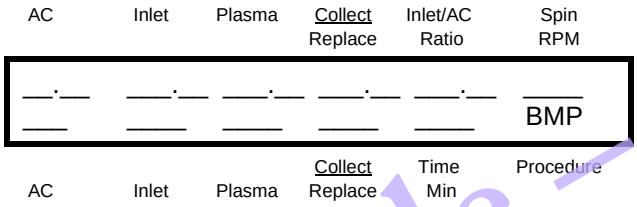

When a BMP procedure is being performed, the abbreviation in the bottom right-hand corner of the display screen is "BMP".

During processing, the bone marrow is first drawn from bag A and returned to bag B. When the hemostat is moved, bone marrow is drawn from bag B and returned to bag A. This transfer between bags continues until the target volume (approximately 3 times the bone marrow volume) has been processed.

3. Just before bag A is empty, move the hemostat to clamp point 2 so that bone marrow will be drawn from bag B. COBE Spectra sounds an alarm when the bag is nearly empty and again when the hemostat should be moved again.

CAUTION

While bag A is being processed, the plasma valve will automatically move to the collect position and plasma will collect. The purpose of plasma collection is to help maintain a stable interface when the procedure switches to processing bag B. The collected plasma can be used for subsequent processing procedures, if necessary.

BMP TIMING:	Press 1 when Bag A empties, Press 2 to disable beeps.

This screen appears at the end of the first bone marrow volume processed only and allows you to calibrate the warning beep timing.

Copyrighted example - Not for distribution

Operator Action	System Action
	The Spectra system sounds an alarm to remind you to change the hemostat from position 1 to position 2 when bag A is almost empty. You have an opportunity to calibrate the system so that the alarms occur at the right time.

4. To calibrate the warning beep timing:

   a. Press 1 as soon as you move the hemostat to point 2 to calibrate the warning beep timing to the bag volume.

   b. Press 2 to disable the warning beeps for the entire bone marrow procedure.

   c. Press the CLEAR key to remove the *BMP TIMING screen message*.

   d. Press the ENTER key to return to this screen.

5. Just before bag B is empty, move the hemostat to clamp point 3 to draw bone marrow from bag A.

6. Just before bag A is empty the second time, move the hemostat to clamp point 4. (The system beeps to remind you.) Continue collecting until the target volume of bone marrow has been processed.

NOTE

If additional volumes of marrow need to be processed to reach the target volume, return the hemostat to clamp point 1 before bag B is empty. Repeat Steps 3, 5 and 6 until all marrow is processed.

7. To display the final Run values, you can press the TARGET VALUES key or press the MENU ON/OFF key and select “Data Entry.”

Start Rinseback

1. When marrow processing is completed:

   a. Press the CHANGE MODE key.

   b. Press the 4 key to start Rinseback mode.

Copyrighted example — Not for distribution

Operator Action	System Action
NOTE Performing Rinseback evacuates the channel so that it is easier to unload and returns extracorporeal red blood cells to the bone marrow bag if additional processing of the red cells is desired.	
CAUTION **In addition to red cells, channel contents include marrow fat. You may want to wash the red cells if reinfusion is required.**	
2. Refer to SECTION 3 – LOADING, PRIMING, AND REMOVING DISPOSABLES for instructions about performing Rinseback and removing disposables.	

Copyrighted example – Not for distribution